USGS VICINITY MAP

Approx. scale: 1" = 2000'

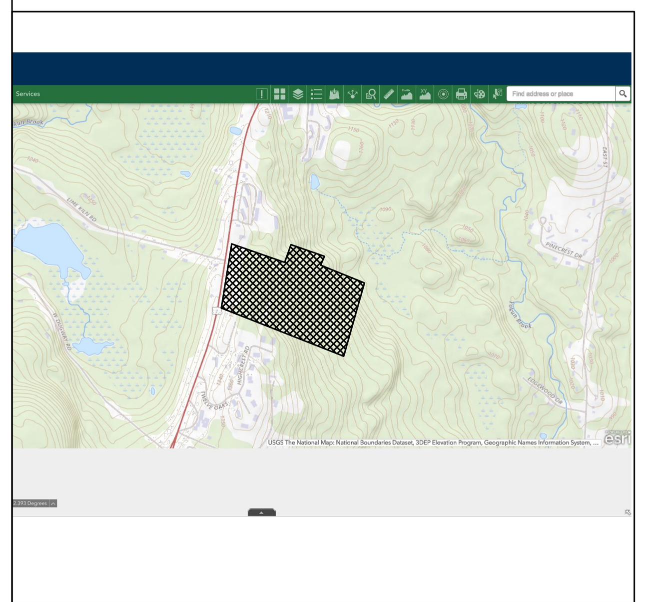

PROPOSED BREWPUB & RELATED SITEWORK

PITTSFIELD ROAD

LENOX, MASS

CIVIL SITEWORK PERMITTING DOCUMENTS

SEPTEMBER, 2021

ZONING VICINITY MAP

Approx. scale: 1" = 2000'

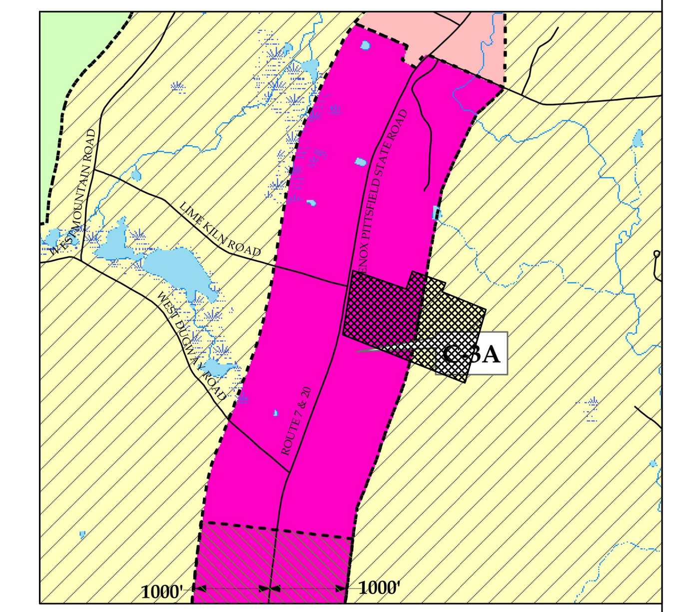

EARTHWORK, GRADING AND ACCESSIBILITY NOTES:

GENERAL

1. IT IS THE CONTRACTOR'S RESPONSIBILITY TO ASSURE THAT ALL EXCAVATIONS AND OTHER SITEWORK COMPLY WITH CURRENT OSHA STANDARDS AND TRENCH SAFETY REGULATIONS.
2. AREAS BEYOND THE LIMITS OF PROPOSED WORK THAT ARE DISTURBED BY CONTRACTOR'S WORK SHALL BE RESTORED TO THEIR ORIGINAL CONDITION BY THE CONTRACTOR AT NO ADDITIONAL COST TO OWNER.
3. ACCESS TO THE SITE FOR EMERGENCY VEHICLES MUST BE PRESERVED AT ALL TIMES.
4. CONTRACTOR SHALL BE RESPONSIBLE FOR ALL DEWATERING OF TRENCHES AND EXCAVATIONS DURING CONSTRUCTION.
5. ALL DEMOLISHED MATERIALS, DEBRIS, PAVEMENT, CURBING, TREES AND STUMPS DESIGNATED FOR REMOVAL, SURPLUS MATERIALS, ETC, SHALL BE HANDLED AND DISPOSED OF OFF-SITE BY THE CONTRACTOR AT HIS EXPENSE, AT IN ACCORDANCE WITH ALL APPLICABLE MUNICIPAL, STATE AND FEDERAL REGULATIONS.
6. ALL WORK WITHIN ANY PUBLIC RIGHT OF WAY (I.E. MUNICIPAL, STATE, ETC) SHALL BE PERFORMED IN ACCORDANCE WITH THE APPLICABLE STANDARDS AND SPECIFICATIONS OF THE AGENCY HAVING JURISDICTION.
7. CONTRACTOR SHALL BE RESPONSIBLE FOR OBTAINING ALL REQUIRED WORK PERMITS FOR WORK WITHIN A PUBLIC WAY.
8. ALL WORK INCLUDED IN THE CONDITIONS OF APPROVAL FOR LOCAL, STATE AND/OR FEDERAL PERMITS SHALL BE THE RESPONSIBILITY OF THE CONTRACTOR AND SHALL BE CONFORMED TO THROUGHOUT CONSTRUCTION.
9. UNLESS OTHERWISE NOTED, ALL MATERIALS AND WORK METHODS SHALL COMPY WITH THE MASS. DOT STANDARD SPECIFICATIONS.

GRADING:

1. CONTRACTOR SHALL ASSURE THAT THERE IS POSITIVE SURFACE DRAINAGE AWAY FROM BUILDINGS IN ALL AREAS.
2. REFER TO AND COORDINATE THE SITEWORK WITH THE ARCHITECTURAL PLANS FOR GRADING AROUND BUILDINGS, RAMPS, STEPS, DOORWAYS, FOUNDATIONS, AND RELATED CONSTRUCTION.

ACCESSIBLITY:

1. CONTRACTOR SHALL PERFORM THE SITEWORK SO AS TO COMPLY WITH THE APPLICABLE REQUIREMENTS OF MASS. ARCHITECTURAL ACCESS BOARD, 521 CMR.
2. EXCEPT WHERE NOTED, IT IS THE DESIGN INTENTION THAT EXTERIOR DOORWAYS SHALL BE ACCESSIBLE AND THAT WALKWAYS APPROACHING BUILDINGS SHALL BE ACCESSIBLE.
3. UNLESS OTHERWISE NOTED OR PERMITTED, ACCESSIBLE WALKWAYS SHALL BE CONSTRUCTED WITH A MAXIMUM RUNNING SLOPE OF 5.0% (LAYOUT TO SLOPE OF 4.5% TO ACCOUNT FOR CONSTUCTION TOLERANCES), AND A MAXIMUM CROSS PITCH OF 2.0% (LAYOUT TO 1.5% FOR CONSTRUCTION TOLERANCES.
4. PER 521 CMR 22.3.1 (EXCEPTION), FOR STREETS AND WAYS WHICH HAVE NATURAL TOPOGRAPHY IN EXCESS OF 5%, SIDEWALKS MAY BE PERMITTED TO HAVE RUNNING SLOPES IN EXCESS OF 5% WITHOUT REQUIRING A RAMP.
5. CURB RAMPS SHALL COMPLY WITH THE APPLICABLE MASS. AAB (521 CMR 21 ET SEQ) REGULATIONS. WHERE APPLICABLE, CURB RAMPS SHALL ALSO CONFORM TO MASS. DOT STANDARDS.
6. UNLESS OTHERWISE NOTED, HANDICAP PARKING SPACES AND ACCESS AISLES SHALL BE CONSTRUCTED WITH A MAXIMUM SLOPE IN ANY DIRECTION OF 2.0% (521 CMR 23.4). LAYOUT SHOULD BE TO SLOPE OF 1.5% TO ALLOW FOR CONSTRUCTION TOLERANCES.
7. HANDICAP RAMPS SHALL BE CONSTRUCTED TO COMPLY WITH 521 CMR 24. THE MAXIMUM SLOPE SHALL BE 1:12 (8.33%) WITHOUT ANY ALLOWANCE FOR EXCEEDANCE.) THE MAXIMUM RISE OF ANY RUN SHALL NOT EXCEED 30" AND THE MAXIMUM LENGTH OF ANY RUN BETWEEN LANDINGS SHALL NOT EXCEED 30'.
8. THE SPOT GRADES SHOWN ON THE PLANS ARE PROVIDED TO GIVE GUIDANCE TO THE CONTRACTOR ABOUT THE DESIGN INTENT FOR ACCESSIBILITY. CONTRACTOR SHALL LAYOUT AND CONSTRUCT THE WORK TO COMPLY WITH THE MASS AAB REQUIREMENTS. ANY DEVIATIONS NOTED IN THE LAYOUT THAT WOULD AFFECT ACCESSIBLITY SHALL BE BROUGHT TO THE ATTENTION OF THE ARCHITECT AND CIVIL ENGINEER.
9. ANY PORTION OF THE CONSTRUCTED WORK WHICH EXCEEDS THE MAXIMUM SLOPES SPECIFIED IN 521 CMR WILL BE CONSIDERED NON-COMPLIANT; THE CONTRACTOR SHALL BE SOLELY RESPONSIBLE FOR REMEDIATING THE NON-COMPLIANT WORK TO BRING IT WITHIN THE MASS. AAB REQUIREMENTS.

CONSTRUCTION-PHASE MEASURES FOR CONTROL OF SEDIMENT AND EROSION AND PROTECTION OF WETLANDS

1. Do not disturb existing vegetated areas far in advance of construction. Limit disturbance only to the extent and duration required for imminent construction activities. Retain and protect natural vegetation and vegetative filter strips wherever possible.
2. Temporary vegetation or a heavy mat of wood chips shall be established on all earth stockpiles or stripped areas which will be bare for more than two months and less than 12 months. Such vegetation shall consist of a commercial conservation seed mixture with a high percentage of annual rye grass. Permanent herbaceous cover shall be established on areas which would be bare more than 12 months.
3. A heavy mat of straw mulch, wood chips, erosion control netting, mesh or blanket matting shall be used on disturbed areas if vegetation cannot be established due to season or on-going construction process, or if otherwise required.
4. Silt fence or carefully positioned staked straw bales shall be installed along the downhill edge of disturbed earthwork areas where required to control erosion and sedimentation.
5. Water courses, including intermittent drainage swales, shall be protected from siltation by silt fence barriers or carefully positioned staked straw bale check dams.
6. Sediment traps shall be constructed downhill of disturbed areas and upstream of watercourses and/or wetlands. Trapped sediments shall be removed from the basins during the construction period before they become 50% full to prevent sediment from being transported downhill. Dispose of sediments in on-site upland disposal areas, properly graded, seeded and mulched.
7. Permanent drainage control structures shall be installed as early as possible in the construction process. Drains shall be provided with drain inlet sediment filters and/or traps.
8. Do not fuel construction equipment or store fuel or other potential contaminants within 100 feet of water courses or wetlands.
9. Precast concrete shall be washed down at the manufacturer's plant. Cast-in-place concrete within 100 feet of watercourses/wetlands shall be placed so as to minimize runoff of stormwater from fresh concrete, through use of sumps, diversions, etc. Concrete trucks and equipment contaminated with fresh concrete shall not be washed down within 100 feet of wetlands.
10. Strictly adhere to all general and special conditions of any Wetlands Protection Act Permits, including plans, details, construction sequencing outline, and other applicable requirements.

AERIAL LOCUS MAP
Scale: 1" = 200'±

GENERAL NOTES REGARDING SITE UTILITIES:

1. PRIOR TO CONSTRUCTION, SITEWORK CONTRACTOR SHALL NOTIFY THE DIG SAFE CENTER, PLUS THE MUNICIPAL AND/OR STATE PUBLIC WORKS DEPARTMENT AND PRIVATE UTILITIES TO ALLOW FOR THEM TO FIELD LOCATE THE FACILITIES IN THE VICINITY OF THE WORK. UPDATE THE NOTIFICATIONS TO DIG SAFE, ETC AS REQUIRED DURING CONSTRUCTION
2. LOCATE AND PROTECT ALL UTILITIES AND STRUCTURES TO REMAIN. LOCATE AND PROPERLY DECOMMISSION EXISTING UTILITIES TO BE DISCONTINUED. ANY UNREPORTED UNDERGROUND UTILITIES ENCOUNTERED DURING CONSTRUCTION SHALL BE REPORTED TO THE ENGINEER FOR A DETERMINATION ABOUT WHETHER OR NOT THEY SHOULD BE REPAIRED OR MAY BE DECOMMISSIONED.
3. COORDINATE SITEWORK WITH OTHER TRADES.
4. COORDINATE EXACT LOCATION, ELEVATION & SIZE OF ALL FOUNDATION PENETRATIONS FOR ALL UTILITIES WITH CONTRACTORS: M/E/P/FP/T
5. REFER TO PLANS AND SPECIFICATIONS FOR REQUIREMENTS FOR EXPLORATORY TEST PITS AND OTHER PRE-CONSTRUCTION EXPLORATIONS.
6. PIPING SUBJECT TO PLUMBING CODE: SITEWORK CONTRACTOR SHALL INSTALL SEWER, WATER AND BUILDING DRAINAGE SERVICE LINES SUBJECT TO THE MASS. STATE PLUMBING CODE TO WITHIN TEN FEET (10') FROM THE BUILDING FOUNDATION. PLUMBING CONTRACTOR SHALL MAKE THE FINAL INSTALLATION AND CONNECTION OF THE SEWER, WATER AND BUILDING DRAINAGE SERVICE LINES WITHIN THE FINAL TEN FEET TO THE BUILDING FOUNDATION. SITEWORK CONTRACTOR SHALL EXCAVATE, BED AND BACKFILL THE TRENCHES TO THE BUILDING FOUNDATION FOR THIS PIPING. (NOTE: BUILDING DRAINAGE LINES INCLUDES STORM DRAIN LINES SUCH AS ROOF LEADERS THAT ORIGINATE INSIDE THE BUILDING; IT DOES NOT INCLUDE FOUNDATION DRAINS, ROOF LEADERS FROM DOWNSPOUTS THAT ORIGINATE OUTSIDE THE BUILDING, OR SURFACE DRAINS OUTSIDE THE BUILDING, WHICH ARE SITEWORK COMPONENTS TO BE INSTALLED BY THE SITEWORK CONTRACTOR.)
7. FIRE PROTECTION PIPING SUBJECT TO FIRE CODE: SITEWORK AND FIRE PROTECTION CONTRACTOR SHALL COORDINATE THE INSTALLATION AND TESTING UNDER NFPA STDS (NFPA24, ETC) OF THE FIRE LINES AND APPURTENANCES FROM THE WATER MAIN TO THE BUILDING. SITEWORK CONTRACTOR SHALL EXCAVATE, BED AND BACKFILL THE TRENCHES AND FURNISH THE PIPING TO THE BUILDING FOUNDATION FOR THIS PIPING.

7A. ANY FIRE SERVICE MAIN INSTALLATION AND TESTING WORK SUBJECT TO NFPA-24 SHALL BE WITNESSED BY THE LICENSED FIRE PROTECTION CONTRACTOR. UPON COMPLETION OF THE WORK INCLUDING FLOW AND PRESSURE TESTS, SITEWORK CONTRACTOR SHALL SUBMIT THE COMPLETED "CONTRACTOR'S MATERIAL AND TEST CERTIFICATE FOR UNDERGROUND PIPING."

8. COORDINATE SITEWORK WITH UTILITY COMPANIES: ELECTRIC, COMMINICATIONS, WIFI, TV, GAS, ETC.
9. COORDINATE WITH ELECTRICAL CONTRACTOR (EC) FOR SITE LIGHTING: EXCAVATE, BED AND BACKFILL FOR CONDUITS, HANDHOLES, VAULTS, AND APPURTENANCES (FURNISHED AND INSTALLED BY EC); FURNISH AND INSTALL PRECAST CONC. POLE BASES WITH EMBEDDED ANCHOR BOLTS AND SWEEPS PROVIDED BY EC; ETC.
10. COORDINATE WITH MEP CONTRACTOR (MC) FOR CAST-IN-PLACE CONC PADS FOR TRANSFORMER, GENERATOR, CONDENSERS, AIR HANDLERS, ETC; MC TO SUPPLY ANY EMBEDDED ITEMS TO SITEWORK CONTRACTOR FOR INSTALLATION.
11. STORM DRAINAGE, EROSION AND SEDIMENTATION CONTROL, AND WETLANDS PROTECTION: REFER TO EROSION AND SEDIMENTATION CONTROL PLANS AND SPECIFICATIONS. PERFORM ALL SITEWORK AS REQUIRED TO REMAIN IN COMPLIANCE THROUGHOUT CONSTRUCTION AND IN ACCORDANCE WITH APPLICABLE PERMITS, INCLUDING BUT NOT LIMITED TO WETLANDS PROTECTION ACT, AND CONSTRUCTION GENERAL PERMIT UNDER THE NATIONAL POLLUTION DISCHARGE ELIMINATION SYSTEM (NPDES) ISSUED BY EPA.
12. WATER AND SEWER LINES SHALL BE SEPARATED A MINIMUM OF 10' HORIZONTALLY AND A MINIMUM OF 18" VERTICALLY AT CROSSINGS. SEE DETAIL.

OWNER/APPLICANT:

ANTIMONY, LLC

CIVIL ENGINEER:

FORESIGHT LAND SERVICES, INC.
1496 West Housatonic Street
Pittsfield, MA

INDEX

SHEET NO.	DESCRIPTION
C-0	TITLE SHEET & INDEX
C-1	EXISTING CONDITIONS
C-2	PROPOSED SITE PLAN
C-3	PROPOSED GRADING PLAN
C-4	PROPOSED UTILITY PLAN
C-5	DETAILS PLAN
C-6	DETAILS PLAN
C-7	DETAILS PLAN
C-8	DETAILS PLAN

NO.	DATE	REVISION/ISSUE	BY
	9-28-21	ISSUE FOR SPECIAL PERMIT	AZM

SHEET TITLE: *COVER SHEET, LOCUS MAPS, NOTES & SHEET INDEX*

PROJECT TITLE: *ANTIMONY LLC*
PITTSFIELD ROAD
LENOX, MA

PROJECT NO. *E2925*
SCALE *AS NOTED*
DATE *9-6-21*
DESIGNED BY *SAM*
DRAWN BY *AZM*
CHECKED BY
SHEET NO. *C-0*
___OF___SHEETS
CADFILE NO: *E2925D07.DWG*

FORESIGHT LAND SERVICES
ENGINEERING SURVEYING PLANNING
FORESIGHT LAND SERVICES, INC.
1496 WEST HOUSATONIC STREET - PITTSFIELD, MA 01201
TEL: (413) 499-1560 FAX: (413) 499-3307 WWW.FORESIGHTLAND.COM

NO.	DATE	REVISION/ISSUE	BY
	9-28-21	ISSUE FOR SPECIAL PERMIT	AZM

SHEET TITLE
EXISTING CONDITIONS PLAN

PROJECT TITLE
ANTIMONY LLC
PITTSFIELD ROAD
LENOX, MA

PROJECT NO. E2925
SCALE AS NOTED
DATE 9-6-21
DESIGNED BY SAM
DRAWN BY AZM
CHECKED BY
SHEET NO. C-1
OF SHEETS
CADFILE NO. E2925D07.DWG

FORESIGHT LAND SERVICES
ENGINEERING SURVEYING PLANNING
FORESIGHT LAND SERVICES, INC.
1496 WEST HOUSATONIC STREET · PITTSFIELD, MA 01201
TEL: (413) 499-1560 FAX: (413) 499-3307 WWW.FORESIGHTLAND.COM

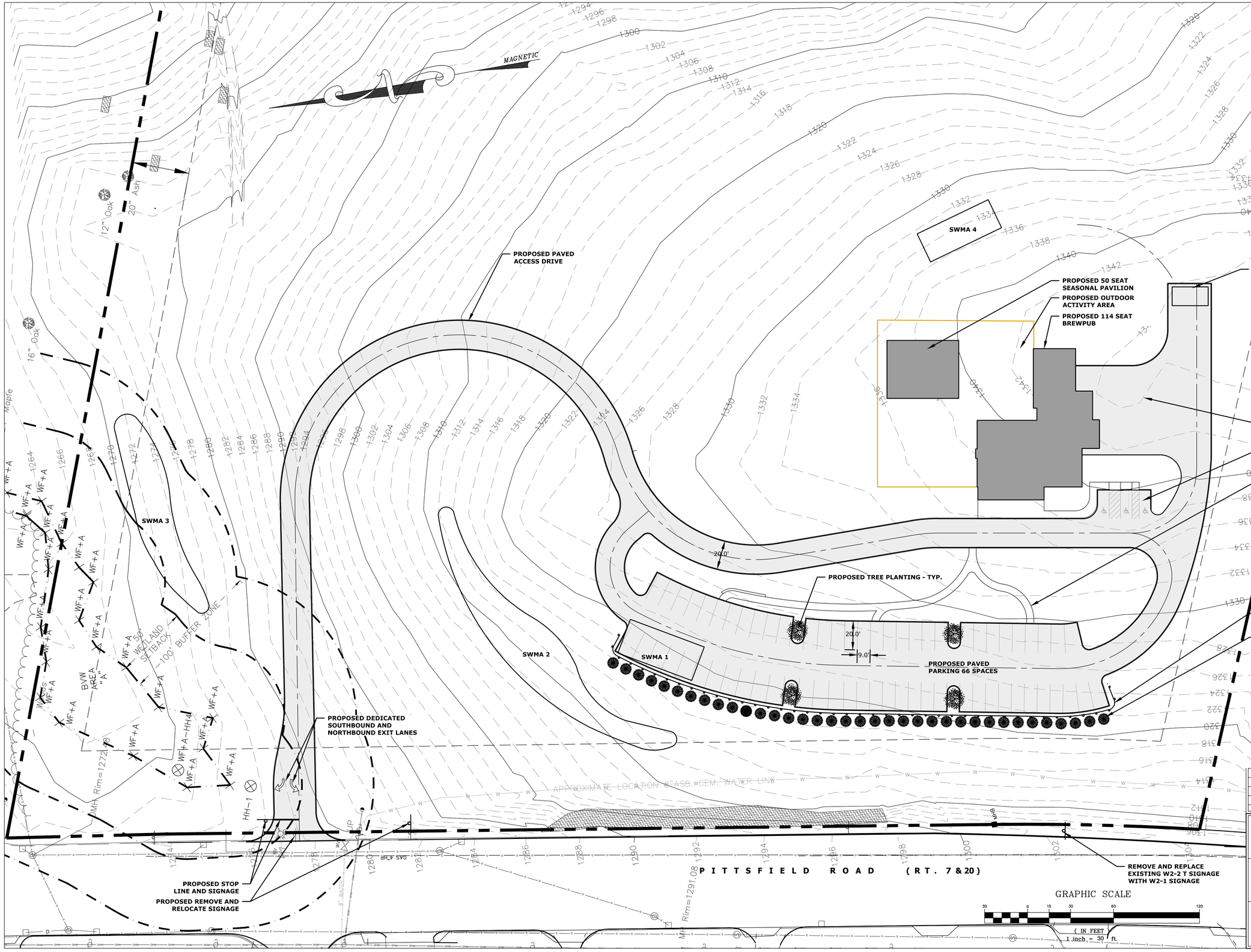

NO.	DATE	REVISION/ISSUE	BY
	9-28-21	ISSUE FOR SPECIAL PERMIT	AZM

SHEET TITLE: PROPOSED SITE PLAN

PROJECT TITLE: ANTIMONY LLC
PITTSFIELD ROAD
LENOX, MA

PROJECT NO. E2925
SCALE AS NOTED
DATE 9-6-21
DESIGNED BY SAM
DRAWN BY AZM
CHECKED BY
SHEET NO. C-2 OF SHEETS
CAD FILE NO. E2925D07.DWG

FORESIGHT LAND SERVICES
ENGINEERING SURVEYING PLANNING
FORESIGHT LAND SERVICES, INC.
1496 WEST HOUSATONIC STREET · PITTSFIELD, MA 01201
TEL: (413) 499-1560 FAX: (413) 499-3307 WWW.FORESIGHTLAND.COM

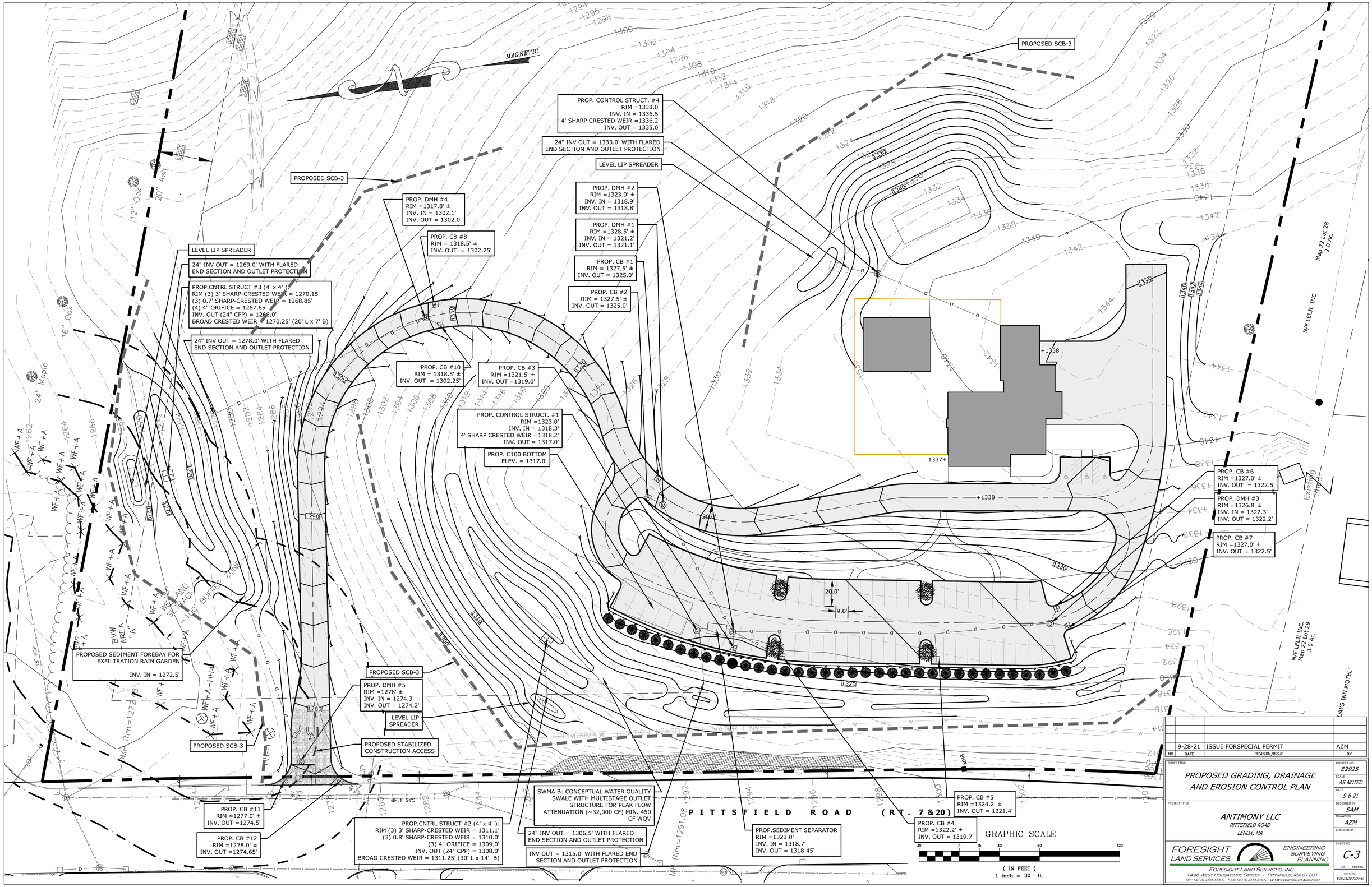

NO.	DATE	REVISION/ISSUE	BY
	9-28-21	ISSUE FORSPECIAL PERMIT	AZM

SHEET TITLE
PROPOSED GRADING, DRAINAGE AND EROSION CONTROL PLAN

PROJECT TITLE
ANTIMONY LLC
PITTSFIELD ROAD
LENOX, MA

PROJECT NO. E2925
SCALE AS NOTED
DATE 9-6-21
DESIGNED BY SAM
DRAWN BY AZM
CHECKED BY
SHEET NO. C-3
OF SHEETS
CAD FILE NO. E2925D07.DWG

FORESIGHT LAND SERVICES
ENGINEERING SURVEYING PLANNING
FORESIGHT LAND SERVICES, INC.
1496 WEST HOUSATONIC STREET · PITTSFIELD, MA 01201
TEL: (413) 499-1560 FAX: (413) 499-3307 WWW.FORESIGHTLAND.COM

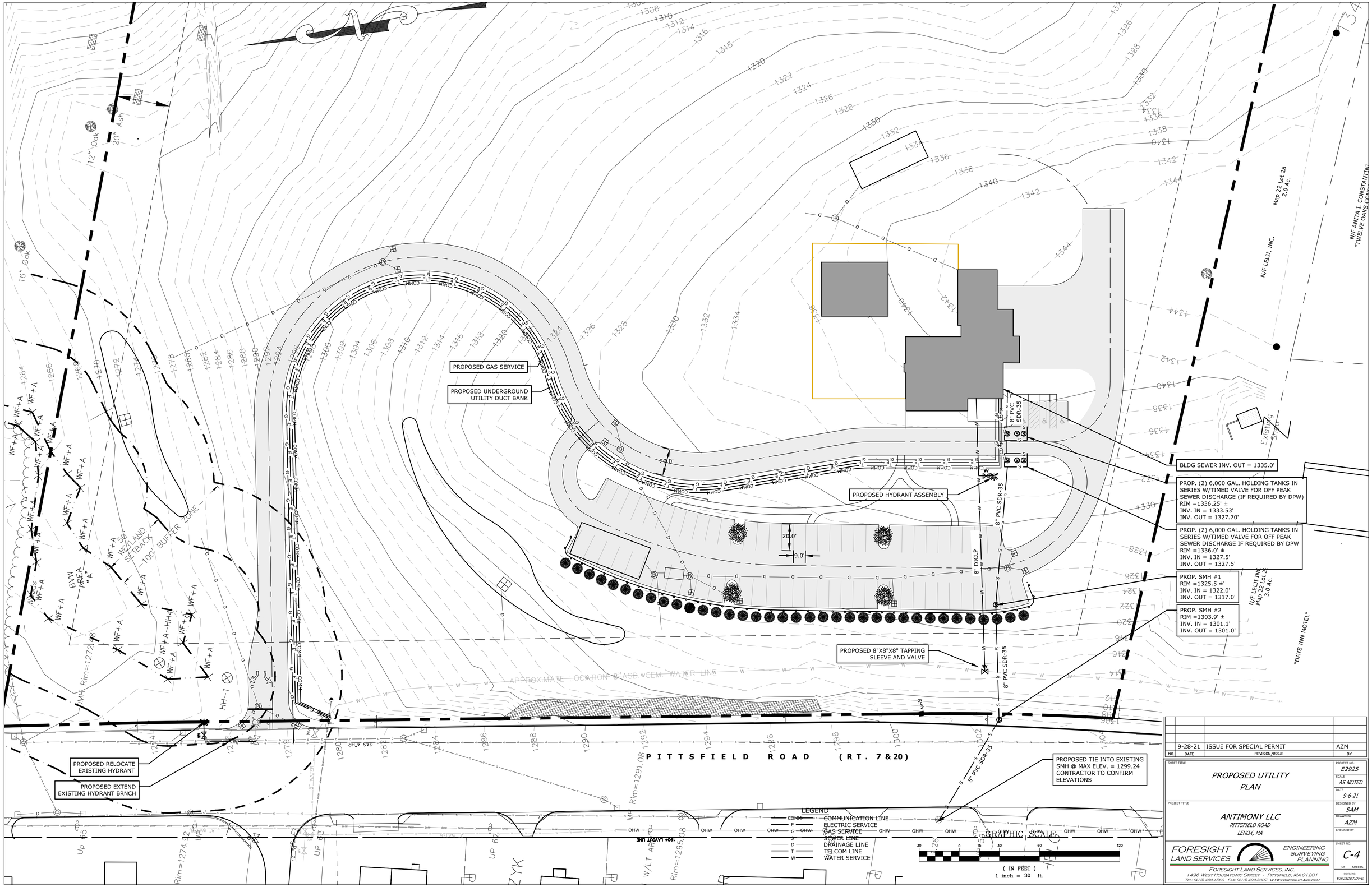

NO.	DATE	REVISION/ISSUE	BY
	9-28-21	ISSUE FOR SPECIAL PERMIT	AZM

SHEET TITLE: PROPOSED UTILITY PLAN

PROJECT TITLE: ANTIMONY LLC
PITTSFIELD ROAD
LENOX, MA

PROJECT NO. E2925
SCALE AS NOTED
DATE 9-6-21
DESIGNED BY SAM
DRAWN BY AZM
CHECKED BY

FORESIGHT LAND SERVICES — ENGINEERING SURVEYING PLANNING

FORESIGHT LAND SERVICES, INC.
1496 WEST HOUSATONIC STREET · PITTSFIELD, MA 01201
TEL: (413) 499-1560 FAX: (413) 499-3307 WWW.FORESIGHTLAND.COM

SHEET NO. C-4 OF SHEETS
CAD FILE NO. E2925D07.DWG

NOTE: STRAW BALES GENERALLY LAST ONLY THREE TO SIX MONTHS. CONDITION SHOULD BE CHECKED AT LEAST WEEKLY, AND BALES SHOULD BE REPLACED WHEN THEY BEGIN TO DETERIORATE.

NOTE: SEDIMENT CONTROL DEVICES SHALL BE CONSTRUCTED DOWNHILL OF DISTURBED AREAS AND UPSTREAM OF WATERCOURSES AND/OR WETLANDS. TRAPPED SEDIMENTS SHALL BE REMOVED FROM THE SEDIMENT CONTROL DEVICE DURING THE CONSTRUCTION PERIOD BEFORE THEY BECOME 50% FULL TO PREVENT SEDIMENT FROM BEING TRANSPORTED DOWNHILL. DISPOSE OF SEDIMENTS IN ON-SITE UPLAND DISPOSAL AREAS, PROPERLY GRADED, SEEDED AND MULCHED.

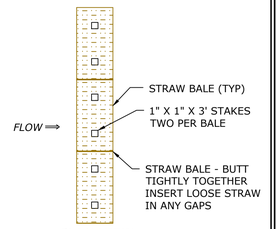

PLAN VIEW

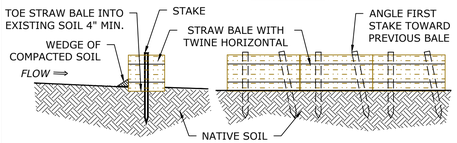

CROSS SECTION ELEVATION

SCB-1

SEDIMENT CONTROL BARRIER TYPE 1

32702A 10/19/15 REV# 2

NOTES: INSTALL SILT FENCE IN INITIAL PHASE OF WORK. INSPECT, MAINTAIN, REPAIR, AND REPLACE AS NEEDED DURING CONSTRUCTION PHASE. REMOVE SEDIMENTS BEFORE ACCUMULATION EXCEEDS CAPACITY OF SILT FENCE. REMOVE SILT FENCE AT END OF WORK AFTER SITE HAS BEEN SATISFACTORILY STABILIZED AGAINST EROSION. WHERE FENCE IS SUBJECT TO HEAVY FLOWS (SUCH AS AT LOW POINTS), INSTALL STRAW BALES BEHIND FENCE FOR REINFORCEMENT (REFER TO TYPE 3 BARRIER DETAIL). INSTALL SILT FENCE AS NEARLY PERPENDICULAR TO SLOPE AS POSSIBLE. WHERE SILT FENCE IS INSTALLED DOWNHILL AT SLOPES > 5%, INSTALL "SAW-TOOTH" FENCE WITH CHECK DAMS AT 50' INTERVALS (PER PLAN VIEW "B" BELOW).

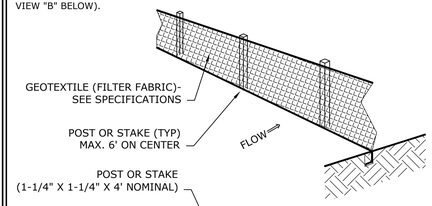

CROSS SECTION

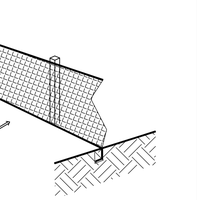

PLAN VIEW "A"

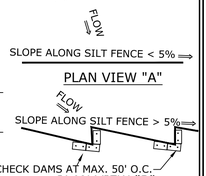

PLAN VIEW "B"

SCB-2

SEDIMENT CONTROL BARRIER TYPE 2

32702B 9/20/95 REV# 2

NOTE: STRAWBALES GENERALLY LAST ONLY THREE TO SIX MONTHS. CONDITION SHOULD BE CHECKED AT LEAST WEEKLY, AND BALES SHOULD BE REPLACED WHEN THE BEGIN TO DETERIORATE.

NOTE: SEDIMENT CONTROL DEVICES SHALL BE CONSTRUCTED DOWNHILL OF DISTURBED AREAS AND UPSTREAM OF WATERCOURSES AND/OR WETLANDS. TRAPPED SEDIMENTS SHALL BE REMOVED FROM THE SEDIMENT CONTROL DEVICE DURING THE CONSTRUCTION PERIOD BEFORE THEY BECOME 50% FULL TO PREVENT SEDIMENT FROM BEING TRANSPORTED DOWNHILL. DISPOSE OF SEDIMENTS IN ON-SITE UPLAND DISPOSAL AREAS, PROPERLY GRADED, SEEDED AND MULCHED.

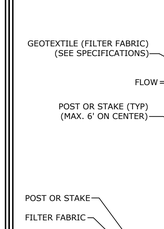

PLAN VIEW

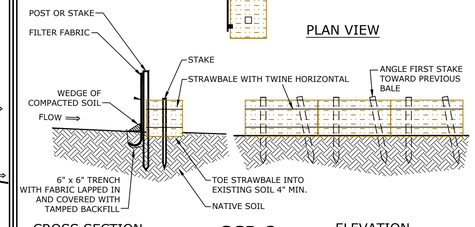

CROSS SECTION ELEVATION

SCB-3

SEDIMENT CONTROL BARRIER TYPE 3

32702C 10/19/15 REV# 3

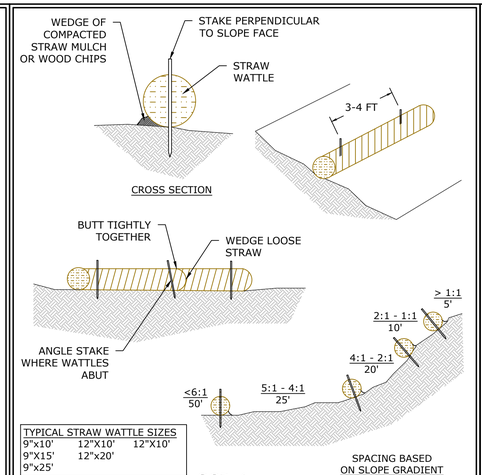

TYPICAL STRAW WATTLE SIZES		
9"x10'	12"X10'	12"X10'
9"X15'	12"x20'	
9"x25'		

SCB-4

TYPICAL STRAW WATTLE INSTALLATION

REV# 0

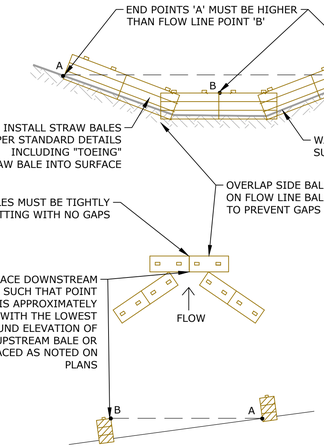

STRAW BALE CHECK DAM

32712C 11/2/15 REV #2

SEDIMENT TRAPS SHALL BE INSTALLED DURING THE INITIAL PHASE OF SITE PREPARATION AND BEFORE EARTHMOVING OPERATIONS BEGIN. SITEWORK CONTRACTOR IS RESPONSIBLE FOR INSPECTING ALL SEDIMENT TRAPS AND OTHER EROSION CONTROLS AT LEAST ONCE A WEEK AND AFTER EACH RAINFALL, AND MAINTAINING THE MEASURES TO ENSURE PROPER FUNCTION. CONTRACTOR SHALL REMOVE ACCUMULATED SEDIMENTS BEFORE TRAP IS 50% FULL, AND SHALL DISPOSE OF SEDIMENTS IN A STABILIZED UPLAND AREA.

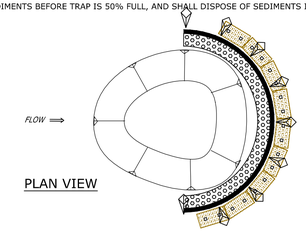

PLAN VIEW

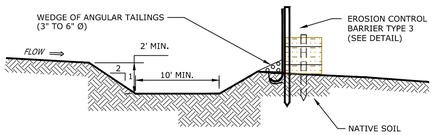

CROSS SECTION

CONSTRUCTION SEDIMENT TRAP

32705A 1/20/93 REV# 1

Z:\stnd details\327 ESM\32702B.DWG 2/9/2011 10:23:27 AM EST

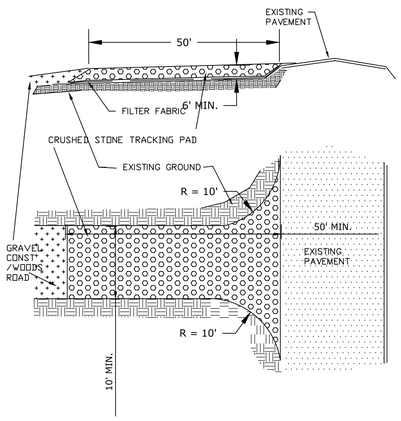

STABILIZED CONSTRUCTION ENTRANCE

32709A 1/20/93 REV# 1

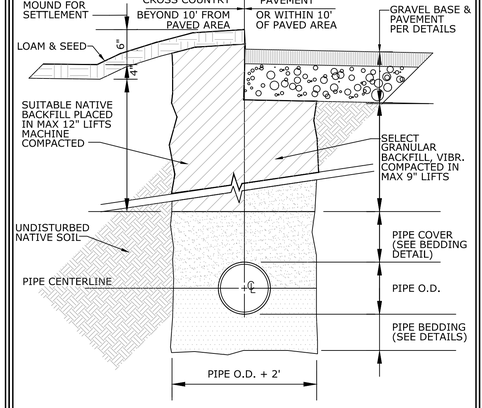

TRENCH CROSS SECTION

3403A 7/6/93 REV# 0

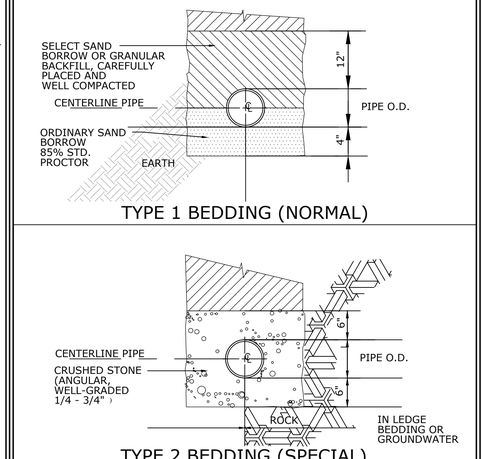

TYPE 1 BEDDING (NORMAL)

TYPE 2 BEDDING (SPECIAL)

PIPE BEDDING

34004A 1/20/05 REV# 3

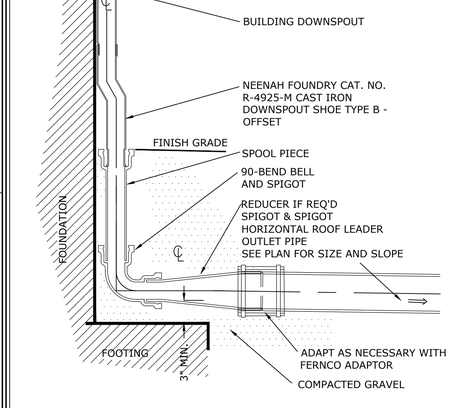

DOWNSPOUT LEADER INLET

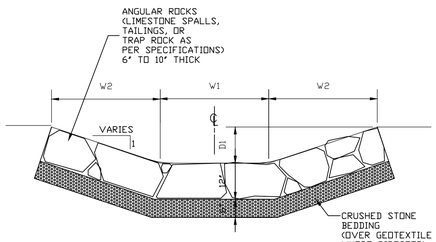

SIDESLOPE	DEPTH "D1"	BOTTOM WIDTH "W1"	BACKSLOPE WIDTH "W2"
2 : 1	12" 12"	2' 3'	2' 2'
3 : 1	12" 12"	2' 3'	3' 3'
4 : 1	12" 12"	2' 3'	4' 4'

STONE-LINED WATERWAY

32105A 4/2/93 REV# 2

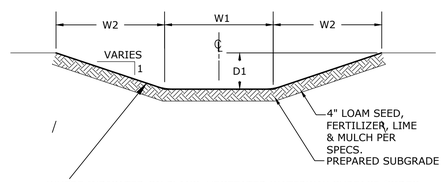

WHERE INDICATED ON PLANS, VEGETATED WATERWAY SURFACE (SIDES AND BOTTOM) SHALL BE REINFORCED WITH GEOTEXTILE: NORTH AMERICAN GREEN # C-125 OR APPROVED EQUAL

SIDESLOPE	DEPTH "D1"	BOTTOM WIDTH "W1"	BACKSLOPE WIDTH "W2"
2 : 1	12" 12"	2' 3'	2' 2'
3 : 1	12" 12"	2' 3'	3' 3'
4: 1	12" 12"	2' 3'	4' 4'

VEGETATED WATERWAY

32105B 7/18/2011 REV# 2

GRAVEL COURSE 1	GRAV. COURSE 2	HOT MIX ASPHALT (MASSDOT M3.11.00)	
8" GRAVEL BORROW (MASSDOT M1.03.0 TYPE C)	4" PROC. GRAV. BASE COURSE (MASSDOT M1.03.1)	2.5" HMA BINDER COURSE	1.5" HMA STD. TOP COURSE

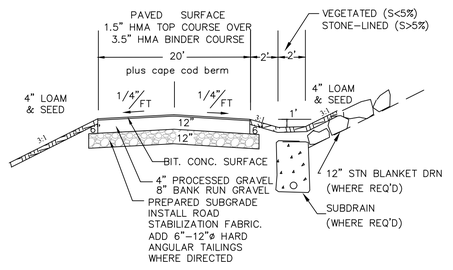

PAVED ACCESS DRIVEWAY-COUNTRY DRAINAGE
20' TRAVELED WAY WITH 1' PAVED SHOULDERS

TYPICAL DRIVEWAY CROSS SECTION

36010B 8/26/93 REV# 0

NO.	DATE	REVISION/ISSUE	BY
	9-28-21	ISSUE FOR SPECIAL PERMIT	AZM

SHEET TITLE: DETAILS PLAN

PROJECT TITLE: ANTIMONY LLC, PITTSFIELD ROAD, LENOX, MA

PROJECT NO. E2925 | SCALE AS NOTED | DATE 9-6-21 | DESIGNED BY SAM | DRAWN BY AZM | CHECKED BY

SHEET NO. C-5 OF SHEETS

FORESIGHT LAND SERVICES — ENGINEERING SURVEYING PLANNING
FORESIGHT LAND SERVICES, INC.
1496 WEST HOUSATONIC STREET · PITTSFIELD, MA 01201
TEL: (413)499-1560 FAX: (413)499-3307 WWW.FORESIGHTLAND.COM

CADFILE NO. E2925D07.DWG

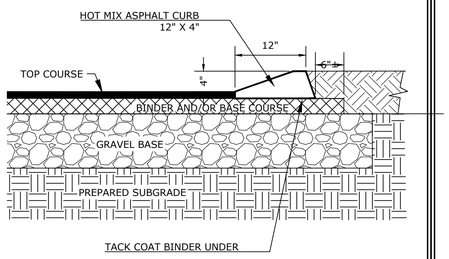

HOT MIX ASPHALT CURB (CAPE COD)

36013B 3-23-2018 REV# 0

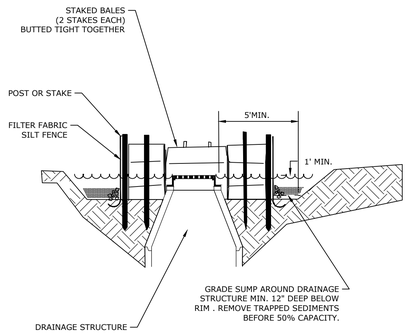

INLET SEDIMENT TRAP (BALES)

32708A 11/3/08 REV# 1

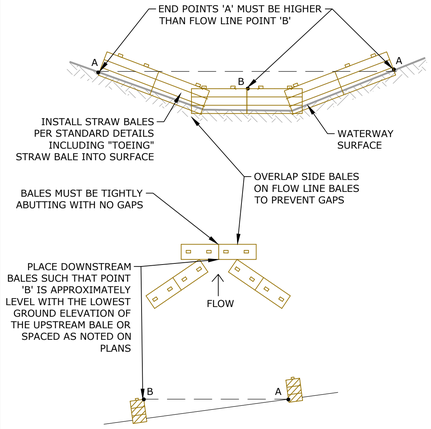

STRAW BALE CHECK DAM

32712C 11/2/15 REV #2

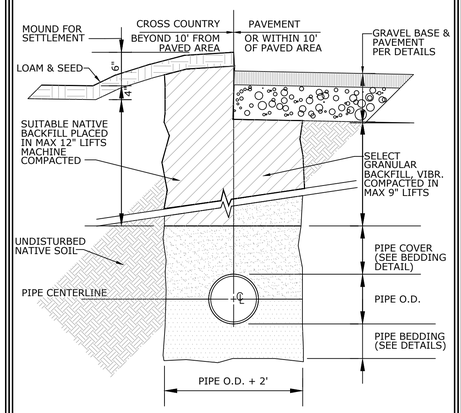

TRENCH CROSS SECTION

34003A 7/6/93 REV# 0

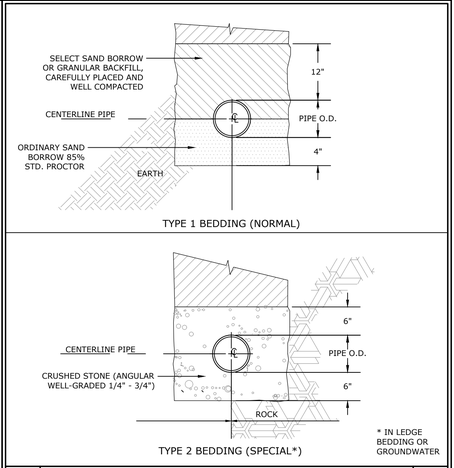

PIPE BEDDING

34004A 1/20/05 REV# 3

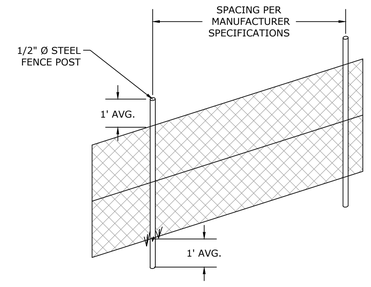

TREE PROTECTION FENCING

3/26/07 REV# 0

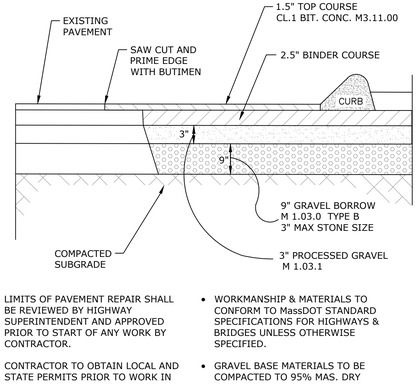

- LIMITS OF PAVEMENT REPAIR SHALL BE REVIEWED BY HIGHWAY SUPERINTENDENT AND APPROVED PRIOR TO START OF ANY WORK BY CONTRACTOR.
- CONTRACTOR TO OBTAIN LOCAL AND STATE PERMITS PRIOR TO WORK IN TOWN WAY AS APPLICABLE.
- PROVIDE TRAFFIC CONTROLS PER TOWN REQUIREMENTS.
- WORKMANSHIP & MATERIALS TO CONFORM TO MassDOT STANDARD SPECIFICATIONS FOR HIGHWAYS & BRIDGES UNLESS OTHERWISE SPECIFIED.
- GRAVEL BASE MATERIALS TO BE COMPACTED TO 95% MAS. DRY DENSITY PER ASTM D1557.
- TRENCHES IN PAVED AREAS TO BE COMPACTED IN MAX. 9" LIFTS TO 95% M.D.D.

PAVEMENT REPAIR DETAIL

36038a 01/21/02 REV# 1

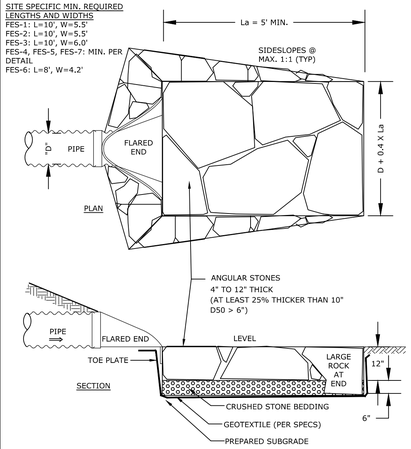

STONE DISCHARGE APRON

32106A 4/2/93 REV# 2

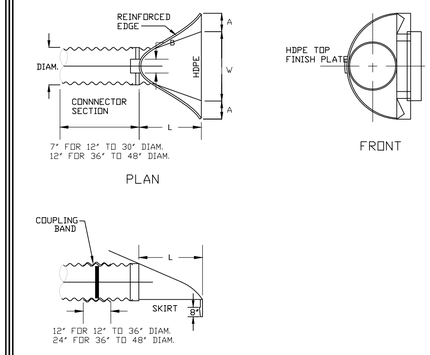

FLARED END SECTION

32117A 6/22/93 REV# 0

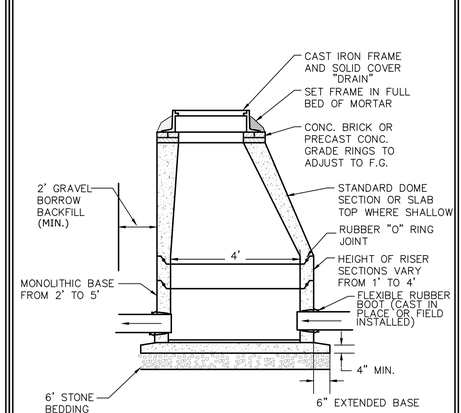

STANDARD DRAINAGE MANHOLE

32110A 2/21/02

AREA	BANK RUN GRAVEL BASE	PROC. GRAVEL BASE	BIT. CONC. BINDER	BIT. CONC. TOP
WALKWAY	8"	4"	2.5"	1.5"

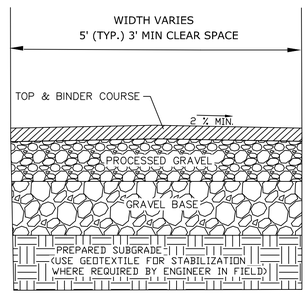

BITUMINOUS CONCRETE SIDEWALK

36015D REV#

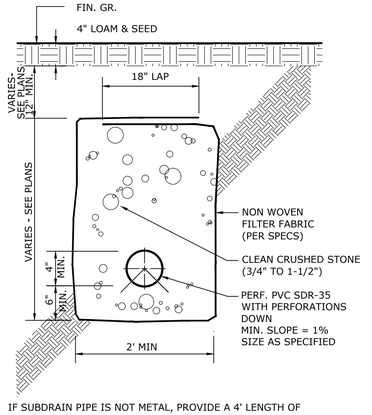

NOTES: IF SUBDRAIN PIPE IS NOT METAL, PROVIDE A 4' LENGTH OF SOLID-WALL DUCTILE IRON PIPE AT OUTLET TO DAYLIGHT, OR AT CONNECTION TO DRAINAGE STRUCTURE. PROVIDE SMALL ANIMAL GUARD IF OUTLET TO DAYLIGHT.

SUBDRAIN

32103A 6/10/2011 REV# 1

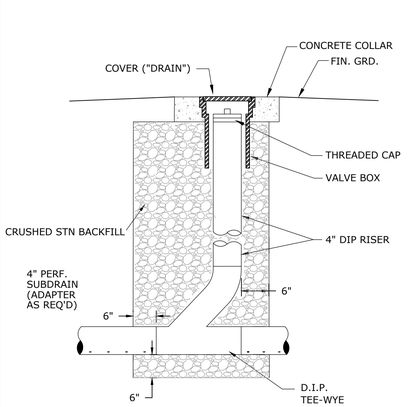

SUBDRAIN CLEANOUT

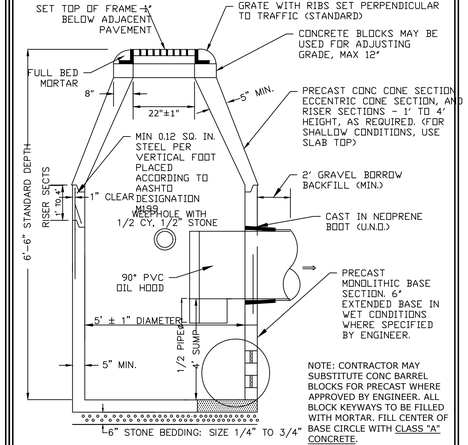

NOTE: CONTRACTOR MAY SUBSTITUTE CONC BARREL BLOCKS FOR PRECAST WHERE APPROVED BY ENGINEER. ALL BLOCK KEYWAYS TO BE FILLED WITH MORTAR. FILL CENTER OF BASE CIRCLE WITH CLASS "A" CONCRETE.

OVERSIZED CATCH BASIN W/ OIL HOOD

32111C REV#

NO.	DATE	REVISION/ISSUE	BY
	9-28-21	ISSUE FOR SPECIAL PERMIT	AZM

SHEET TITLE: *DETAILS PLAN*

PROJECT NO.: E2925
SCALE: AS NOTED
DATE: 9-6-21
DESIGNED BY: SAM
DRAWN BY: AZM
CHECKED BY:

PROJECT TITLE: *ANTIMONY LLC*
PITTSFIELD ROAD
LENOX, MA

SHEET NO.: C-6
OF SHEETS

FORESIGHT LAND SERVICES — ENGINEERING SURVEYING PLANNING

FORESIGHT LAND SERVICES, INC.
1496 WEST HOUSATONIC STREET - PITTSFIELD, MA 01201
TEL: (413) 499-1580 FAX: (413) 499-3307 WWW.FORESIGHTLAND.COM

DISPLAY NO.: E2925007.DWG

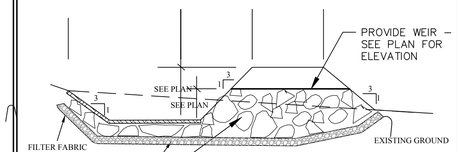

PERVIOUS ROCK BERM

32108A
6/22/93
REV# 0

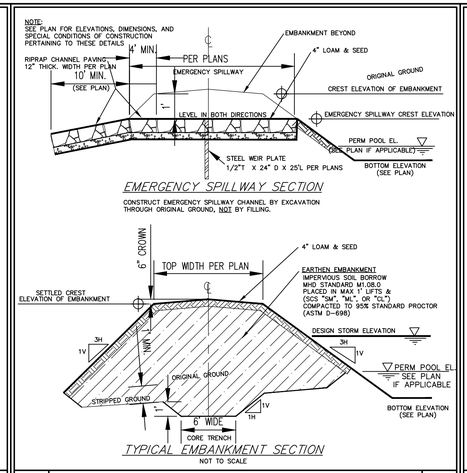

STORMWATER BASIN EMBANKMENT

32115A
9/26/95
REV# 0

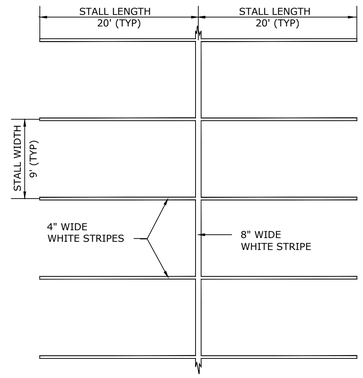

PARKING STALL STRIPING DETAIL

36024A
REV#

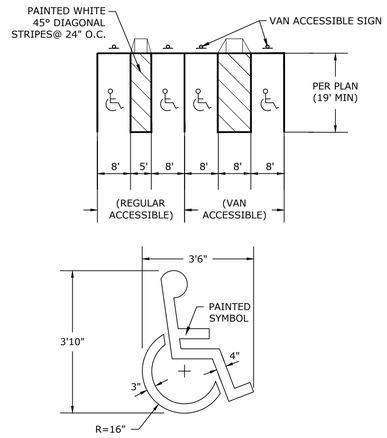

HANDICAP PARKING STALL STRIPING

36025A
10/00
REV# 1

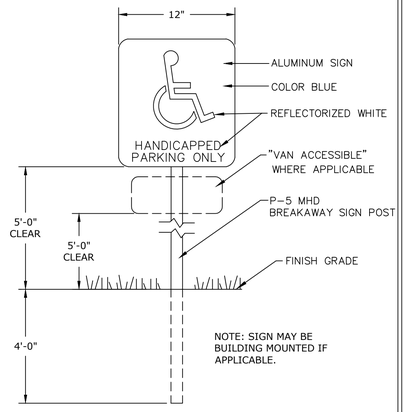

PROVIDE ONE SIGN PER HANDICAPPED PARKING STALL

HANDICAPPED PARKING SIGN

36033B
7/7/11
REV#1

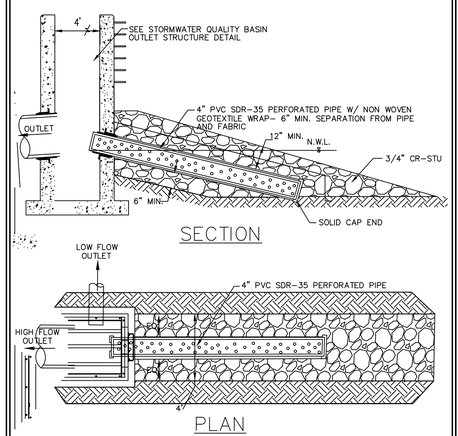

SWMA REVERSE SLOPE TRICKLE FILTER

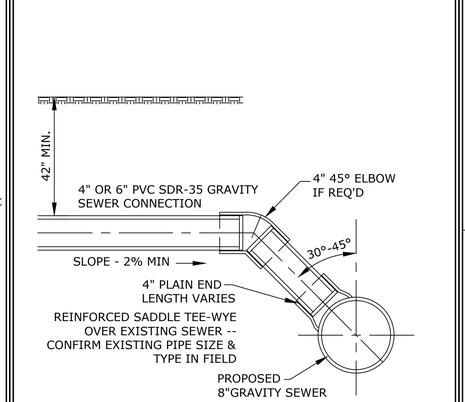

NOTE: INSTALL SEWER SERVICE PIPE WITH REQUIRED CLEARANCES TO OTHER UTILITIES, INCLUDING WATER MAINS -- VERIFY IN FIELD -- ENCASE IN CONCRETE IF REQUIRED AT CLOSE CROSSINGS

GRAVITY SEWER SERVICE CONNECTION

330098
8/17/09
REV# 2

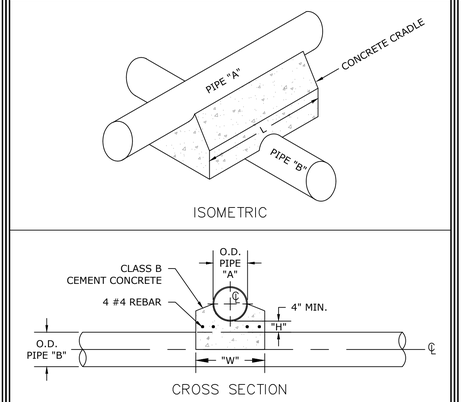

NOTES:
MINIMUM LENGTH ("L") OF CRADLE SHALL BE O.D. OF PIPE "B" PLUS 2 FEET (2.0').
MINIMUM WIDTH ("W") SHALL BE O.D. OF PIPE "A" PLUS 1 FOOT (1.0').
WHEN SEPARATION ("H") IS 1 FOOT (1.0') OR MORE, NO CRADLE IS REQUIRED.

PIPE CRADLE

34005A
7/6/93
REV# 0

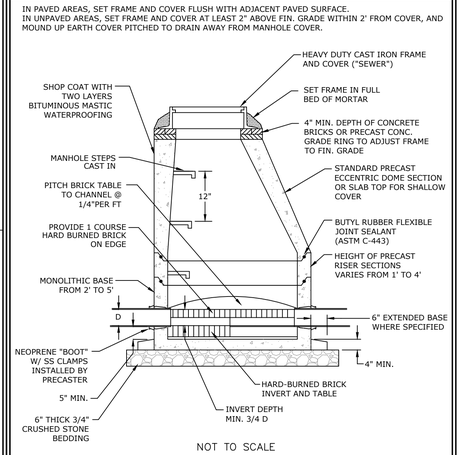

NOT TO SCALE

STANDARD PRECAST SEWER MANHOLE

33005A
10/00
REV# 1

NOTES:
1. SEWER LINES SHALL TYPICALLY BE INSTALLED AT LEAST 18" LOWER THAN EXISTING OR PROPOSED WATER MAINS WITHIN 10 FEET HORIZONTALLY UNLESS CONDITIONS PROHIBIT IT.
2. WHERE SEWER MUST CROSS UNDER THE WATER MAIN, THE SEWER SHALL BE LAID SO THE TOP OF THE SEWER IS AT LEAST 18" BELOW THE BOTTOM OF THE WATER MAIN. (SEE DETAIL BELOW)
3. IF THE VERTICAL SEPARATION AT THE WATER/SEWER CROSSING MUST BE LESS THAN 18" FROM THE TOP OF THE SEWER TO THE BOTTOM OF THE WATER MAIN, THE WATER LINE SHOULD BE RELOCATED TO CONFORM TO THE REQUIRED SEPARATION. ALTERNATIVELY,THE WATER MAIN SHALL BE RECONSTRUCTED WITH MECHANICAL JOINT CEMENT-LINED DUCTILE IRON PIPE FOR A DISTANCE OF 10 FEET EACH SIDE OF THE SEWER; AND ONE FULL LENGTH OF WATER MAIN SHALL BE CENTERED OVER THE SEWER SO THE JOINTS WILL BE AS FAR FROM THE SEWER AS POSSIBLE.
4. IF THE REQUIRED 18" VERTICAL SEPARATION (AND/OR REQUIRED HORIZONTAL SEPARATION) CANNOT BE MET, BOTH THE WATER MAIN AND SEWER MAIN SHALL BE CONSTRUCTED OF MECHANICAL JOINT CEMENT-LINED DUCTILE IRON PIPE FOR AT LEAST 10 FEET EACH SIDE OF THE CROSSING; AND BOTH PIPES SHALL BE PRESSURE TESTED FOR WATERTIGHTNESS OR BOTH PIPES SHALL BE ENCASED IN CONCRETE.

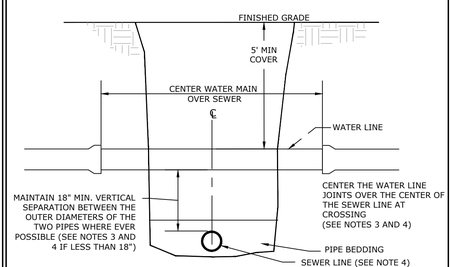

SEWER/WATER CROSSING DETAIL

33011B
4/11/08
REV# 2

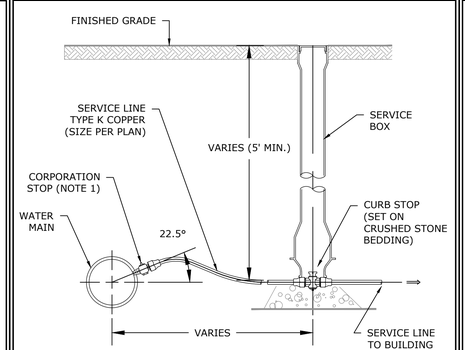

NOTES:
1. CORPORATION STOP SHALL BE INSTALLED IN MAIN BY DIRECT DRILLING AND TAPPING, PROVIDED THAT PIPE SIZE, WALL THICKNESS AND CONDITIONS PROVIDE ADEQUATE FULL THREADS. OTHERWISE, INSTALLATION SHALL USE SERVICE CLAMPS, SADDLES OR TEES.
2. CORPORATION STOPS SHALL BE SPACED AT LEAST 2 FEET APART.
3. ALL MATERIALS AND METHODS SHALL CONFORM TO MUNICIPAL STANDARD.

WATER SERVICE CONNECTION

34008A
7/6/93
REV# 0

NOTES:
HYDRANT AND VALVE TYPE, STYLE AND MANUFACTURER SHALL BE MUNICIPAL STANDARD. CONTRACTOR SHALL CONFIRM SPECS PRIOR TO ORDERING, INCLUDING NUT TYPE AND OPEN LEFT OR RIGHT.

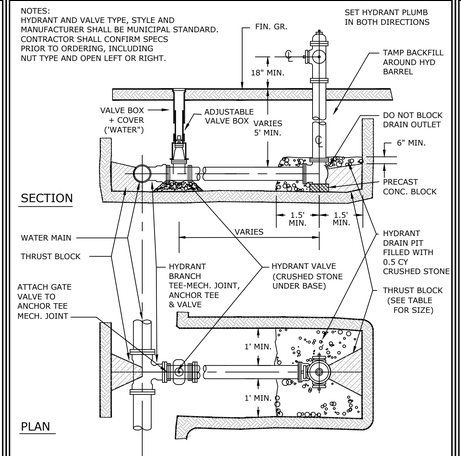

HYDRANT ASSEMBLY

34007B
1/8/02
REV#1

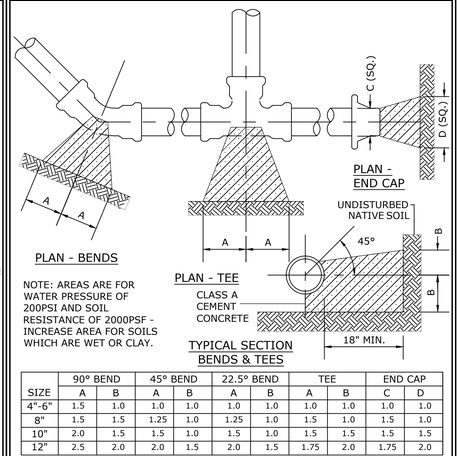

NOTE: AREAS ARE FOR WATER PRESSURE OF 200PSI AND SOIL RESISTANCE OF 2000PSF - INCREASE AREA FOR SOILS WHICH ARE WET OR CLAY.

SIZE	90° BEND		45° BEND		22.5° BEND		TEE		END CAP	
	A	B	A	B	A	B	A	B	C	D
4"-6"	1.5	1.0	1.0	1.0	1.0	1.0	1.0	1.0	1.0	1.0
8"	1.5	1.5	1.25	1.0	1.25	1.0	1.5	1.0	1.5	1.0
10"	2.0	1.5	1.5	1.0	1.5	1.0	1.5	1.5	1.5	1.5
12"	2.5	2.0	2.0	1.5	2.0	1.5	1.75	2.0	1.75	2.0

THRUST BLOCKS

34006B
7/6/93
REV# 0

NO.	DATE	REVISION/ISSUE	BY
	9-28-21	ISSUE FOR SPECIAL PERMIT	AZM

SHEET TITLE: DETAILS PLAN

PROJECT TITLE: ANTIMONY LLC
PITTSFIELD ROAD
LENOX, MA

PROJECT NO.: E2925
SCALE: AS NOTED
DATE: 9-6-21
DESIGNED BY: SAM
DRAWN BY: AZM
CHECKED BY:
SHEET NO.: C-7
OF SHEETS
CADFILE NO.: E2925D07.DWG

FORESIGHT LAND SERVICES
ENGINEERING SURVEYING PLANNING
FORESIGHT LAND SERVICES, INC.
1496 WEST HOUSATONIC STREET - PITTSFIELD, MA 01201
TEL: (413) 499-1560 FAX: (413) 499-3307 WWW.FORESIGHTLAND.COM

NOTE : SPECS PROIDED FOR CULTEC 330XL HD
- SEE MANUFACTURER SPECS FOR C 100HD

CULTEC RECHARGER® 330XLHD PRODUCT SPECIFICATIONS

GENERAL
CULTEC RECHARGER 330XLHD CHAMBERS ARE DESIGNED FOR UNDERGROUND STORMWATER MANAGEMENT. THE CHAMBERS MAY BE USED FOR RETENTION, RECHARGING, DETENTION OR CONTROLLING THE FLOW OF ON-SITE STORMWATER RUNOFF.

CHAMBER PARAMETERS
1. THE CHAMBERS WILL BE MANUFACTURED IN THE U.S.A. BY CULTEC, INC. OF BROOKFIELD, CT (203-775-4416 OR 1-800-428-5832).
2. THE CHAMBER WILL BE VACUUM THERMOFORMED OF BLACK POLYETHYLENE.
3. THE CHAMBER WILL BE ARCHED IN SHAPE.
4. THE CHAMBER WILL BE OPEN-BOTTOMED.
5. THE CHAMBER WILL BE JOINED USING AN INTERLOCKING OVERLAPPING RIB METHOD. CONNECTIONS MUST BE FULLY SHOULDERED OVERLAPPING RIBS, HAVING NO SEPARATE COUPLINGS OR SEPARATE END WALLS
6. THE NOMINAL CHAMBER DIMENSIONS OF THE CULTEC RECHARGER 330XLHD SHALL BE 30.5 INCHES (775 mm) TALL, 52 INCHES (1321 mm) WIDE AND 8.5 FEET (2.59 m) LONG. THE INSTALLED LENGTH OF A JOINED RECHARGER 330XLHD SHALL BE 7 FEET (2.13 m).
7. MAXIMUM INLET OPENING ON THE CHAMBER END WALL IS 24 INCHES (600 mm).
8. THE CHAMBER WILL HAVE TWO SIDE PORTALS TO ACCEPT CULTEC HVLV® FC-24 FEED CONNECTORS TO CREATE AN INTERNAL MANIFOLD. THE NOMINAL DIMENSIONS OF EACH SIDE PORTAL WILL BE 10.5 INCHES (267 mm) HIGH BY 11.5 INCHES (292 mm) WIDE. MAXIMUM ALLOWABLE OUTER DIAMETER (O.D.) PIPE SIZE IN THE SIDE PORTAL IS 11.75 INCHES (298 mm).
9. THE NOMINAL CHAMBER DIMENSIONS OF THE CULTEC HVLV FC-24 FEED CONNECTOR SHALL BE 12 INCHES (305 mm) TALL, 16 INCHES (406 mm) WIDE AND 24.2 INCHES (614 mm) LONG.
10. THE NOMINAL STORAGE VOLUME OF THE RECHARGER 330XLHD CHAMBER WILL BE 7.459 FT³ / FT (0.693 m³ / m) - WITHOUT STONE. THE NOMINAL STORAGE VOLUME OF A JOINED RECHARGER 330XLHD SHALL BE 52.213 FT³ / UNIT (1.478 m³ / UNIT) - WITHOUT STONE.
11. THE NOMINAL STORAGE VOLUME OF THE HVLV FC-24 FEED CONNECTOR WILL BE 0.913 FT³ / FT (0.085 m³ / m) - WITHOUT STONE.
12. THE RECHARGER 330XLHD CHAMBER WILL HAVE FIFTY-SIX DISCHARGE HOLES BORED INTO THE SIDEWALLS OF THE UNIT'S CORE TO PROMOTE LATERAL CONVEYANCE OF WATER.
13. THE RECHARGER 330XLHD CHAMBER SHALL HAVE 16 CORRUGATIONS.
14. THE END WALL OF THE CHAMBER, WHEN PRESENT, WILL BE AN INTEGRAL PART OF THE CONTINUOUSLY FORMED UNIT. SEPARATE END PLATES CANNOT BE USED WITH THIS UNIT.
15. THE RECHARGER 330XLRHD STAND ALONE UNIT MUST BE FORMED AS A WHOLE CHAMBER HAVING TWO FULLY FORMED INTEGRAL END WALLS AND HAVING NO SEPARATE END PLATES OR SEPARATE END WALLS.
16. THE RECHARGER 330XLSHD STARTER UNIT MUST BE FORMED AS A WHOLE CHAMBER HAVING ONE FULLY FORMED INTEGRAL END WALL AND ONE PARTIALLY FORMED INTEGRAL END WALL WITH A LOWER TRANSFER OPENING OF 14 INCHES (356 mm) HIGH X 34.5 INCHES (876 mm) WIDE.
17. THE RECHARGER 330XLIHD INTERMEDIATE UNIT MUST BE FORMED AS A WHOLE CHAMBER HAVING ONE FULLY OPEN ENDWALL AND ONE PARTIALLY FORMED INTEGRAL END WALL WITH A LOWER TRANSFER OPENING OF 14 INCHES (356 mm) HIGH X 34.5 INCHES (876 mm) WIDE.
18. THE RECHARGER 330XLEHD END UNIT MUST BE FORMED AS A WHOLE CHAMBER HAVING ONE FULLY FORMED INTEGRAL END WALL AND ONE FULLY OPEN END WALL AND HAVING NO SEPARATE END PLATES OR END WALLS.
19. THE HVLV FC-24 FEED CONNECTOR MUST BE FORMED AS A WHOLE CHAMBER HAVING TWO OPEN END WALLS AND HAVING NO SEPARATE END PLATES OR SEPARATE END WALLS. THE UNIT WILL FIT INTO THE SIDE PORTALS OF THE RECHARGER 330XLHD AND ACT AS CROSS FEED CONNECTIONS.
20. CHAMBERS MUST HAVE HORIZONTAL STIFFENING FLEX REDUCTION STEPS BETWEEN THE RIBS.
21. HEAVY DUTY UNITS ARE DESIGNATED BY A COLORED STRIPE FORMED INTO THE PART ALONG THE LENGTH OF THE CHAMBER.
22. THE CHAMBER WILL HAVE A 6 INCH (152 mm) DIAMETER RAISED INTEGRAL CAP LOCATED ON TOP OF THE ARCH IN THE CENTER OF EACH UNIT TO BE USED AS AN OPTIONAL INSPECTION PORT OR CLEAN-OUT.
23. THE UNITS MAY BE TRIMMED TO CUSTOM LENGTHS BY CUTTING BACK TO ANY CORRUGATION.
24. THE CHAMBER SHALL BE MANUFACTURED IN AN ISO 9001:2008 CERTIFIED FACILITY.
25. MAXIMUM ALLOWED COVER OVER TOP OF UNIT SHALL BE 12 FEET (3.66 m)
26. THE CHAMBER WILL BE DESIGNED TO WITHSTAND TRAFFIC LOADS WHEN INSTALLED ACCORDING TO CULTEC'S RECOMMENDED INSTALLATION INSTRUCTIONS.

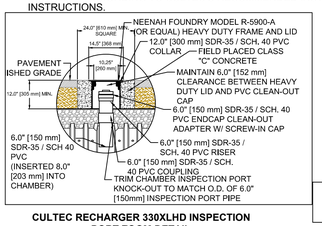

CULTEC RECHARGER 330XLHD INSPECTION PORT ZOOM DETAIL

CULTEC HVLV® FC-24 FEED CONNECTOR PRODUCT SPECIFICATIONS

GENERAL
CULTEC HVLV FC-24 FEED CONNECTORS ARE DESIGNED TO CREATE AN INTERNAL MANIFOLD FOR CULTEC RECHARGER 280HD STORMWATER CHAMBERS.

CHAMBER PARAMETERS
1. THE CHAMBERS WILL BE MANUFACTURED BY CULTEC, INC. OF BROOKFIELD, CT. (203-775-4416 OR 1-800-428-5832)
2. THE CHAMBER WILL BE VACUUM THERMOFORMED OF BLACK HIGH MOLECULAR WEIGHT HIGH DENSITY POLYETHYLENE (HMWHDPE).
3. THE CHAMBER WILL BE ARCHED IN SHAPE.
4. THE CHAMBER WILL BE OPEN-BOTTOMED.
5. THE NOMINAL CHAMBER DIMENSIONS OF THE CULTEC HVLV FC-24 FEED CONNECTOR SHALL BE 12 INCHES (305 mm) TALL, 16 INCHES (406 mm) WIDE AND 24.2 INCHES (614 mm) LONG.
6. THE NOMINAL STORAGE VOLUME OF THE HVLV FC-24 FEED CONNECTOR WILL BE 0.913 FT³ / FT (0.085 m³ / m) - WITHOUT STONE.
7. THE HVLV FC-24 FEED CONNECTOR CHAMBER SHALL HAVE 2 CORRUGATIONS.
8. THE HVLV FC-24 FEED CONNECTOR MUST BE FORMED AS A WHOLE CHAMBER HAVING TWO OPEN END WALLS AND HAVING NO SEPARATE END PLATES OR SEPARATE END WALLS. THE UNIT WILL FIT INTO THE SIDE PORTALS OF THE CULTEC RECHARGER STORMWATER CHAMBER AND ACT AS CROSS FEED CONNECTIONS CREATING AN INTERNAL MANIFOLD.
9. THE CHAMBER WILL BE DESIGNED TO WITHSTAND TRAFFIC LOADS WHEN INSTALLED ACCORDING TO CULTEC'S RECOMMENDED INSTALLATION INSTRUCTIONS.
10. THE CHAMBER SHALL BE MANUFACTURED IN AN ISO 9001:2008 CERTIFIED FACILITY.

CULTEC NO. 66™ WOVEN GEOTEXTILE

GENERAL
CULTEC NO. 66™ WOVEN GEOTEXTILE IS UTILIZED AS AN UNDERLAYMENT TO PREVENT SCOURING CAUSED BY WATER MOVEMENT WITHIN THE CULTEC CHAMBERS AND FEED CONNECTORS UTILIZING THE CULTEC MANIFOLD FEATURE.

GEOTEXTILE PARAMETERS
1. THE GEOTEXTILE SHALL BE PROVIDED BY CULTEC, INC. OF BROOKFIELD, CT. (203-775-4416 OR 1-800-428-5832)
2. THE GEOTEXTILE SHALL BE BLACK IN APPEARANCE.
3. THE GEOTEXTILE SHALL HAVE A TENSILE STRENGTH OF 315 LBS (1.40KN) PER ASTM D4632 TESTING METHOD.
4. THE GEOTEXTILE SHALL HAVE A TENSILE ELONGATION RESISTANCE OF 15% PER ASTM D4632 TESTING METHOD.
5. THE GEOTEXTILE SHALL HAVE A MULLEN BURST RESISTANCE OF 600PSI (4138 KPA) PER ASTM D3786 TESTING METHOD.
6. THE GEOTEXTILE SHALL HAVE A TEAR RESISTANCE OF 115 LBS (0.51 KN) PER ASTM D4533 TESTING METHOD.
7. THE GEOTEXTILE SHALL HAVE A PUNCTURE RESISTANCE OF 150 LBS (0.66 KN) PER ASTM D4833 TESTING METHOD.
8. THE GEOTEXTILE SHALL HAVE A CBR PUNCTURE RESISTANCE OF 900 LBS (4.00 KN) PER ASTM D6241 TESTING METHOD.
9. THE GEOTEXTILE SHALL HAVE A UV RESISTANCE OF 70% @ 500 HRS. PER ASTM D4355 TESTING METHOD.
10. THE GEOTEXTILE SHALL HAVE A PERMITTIVITY RATING OF 0.05 SEC-1 PER ASTM D4491 TESTING METHOD.
11. THE GEOTEXTILE SHALL HAVE A WATER FLOW RATING OF 4 GPM/FT2 (160 LPM/M2) PER ASTM D4491 TESTING METHOD.
12. THE GEOTEXTILE SHALL HAVE A PERCENT OPEN AREA OF <1% PER CW-02215 TESTING METHOD.
13. THE GEOTEXTILE SHALL HAVE AN APPARENT OPENING SIZE OF 40 US STD. SIEVE (0.425 MM) PER ASTM D4751 TESTING METHOD.
14. THE GEOTEXTILE SHALL CONSIST OF A 100% HIGH-TENACITY, SILT-FILM POLYPROPYLENE YARNS.

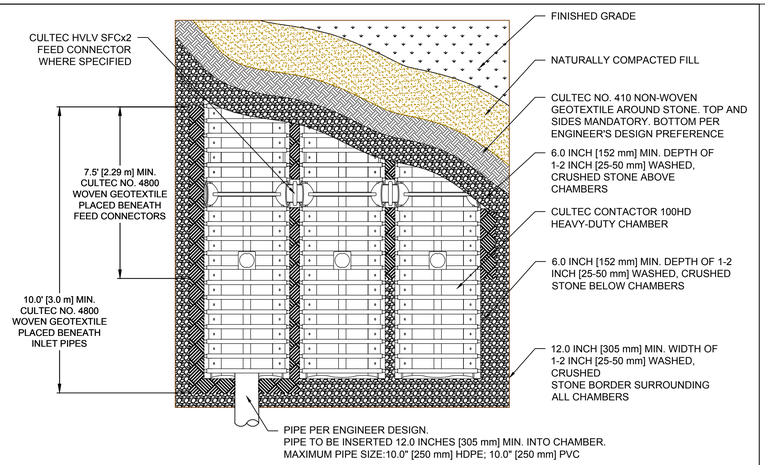

CULTEC CONTACTOR 100HD HEAVY DUTY PLAN VIEW

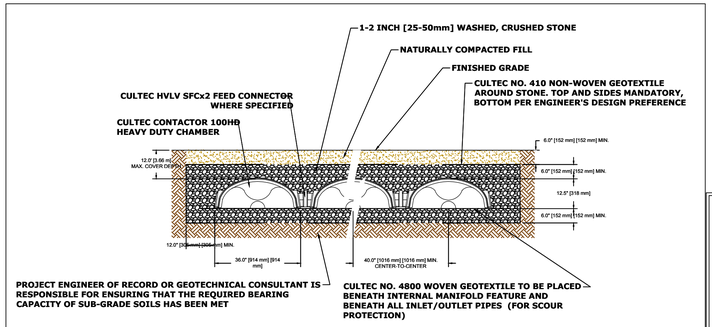

100HD 5.0 CULTEC CONTACTOR 100HD HEAVY DUTY SYSTEM CROSS SECTION

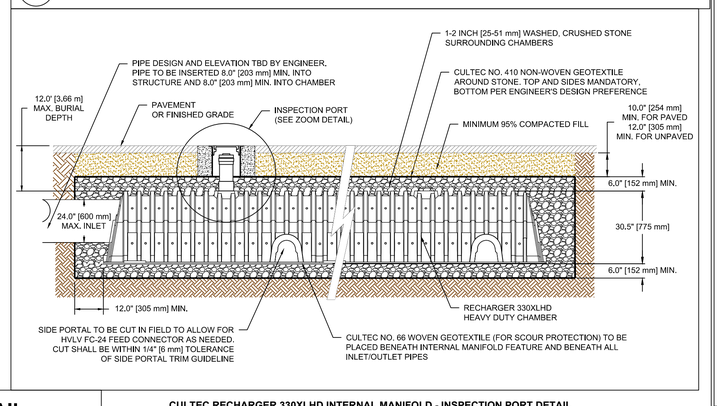

CULTEC RECHARGER 330XLHD INTERNAL MANIFOLD - INSPECTION PORT DETAIL
CULTEC CONTACTOR 100HD SIMILAR - NOT SHOWN

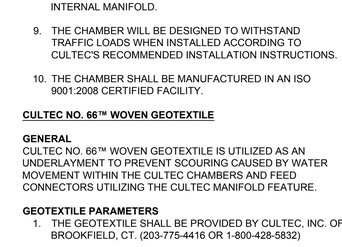

INSPECTION PORT - ZOOM DETAIL

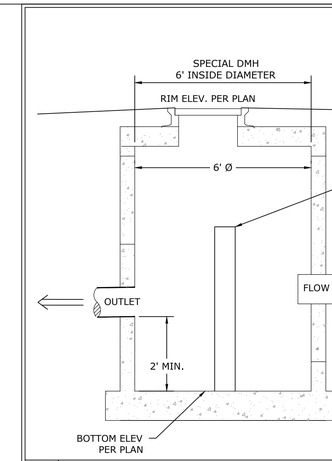

SPECIAL DRAINAGE CONTROL STRUCTURES

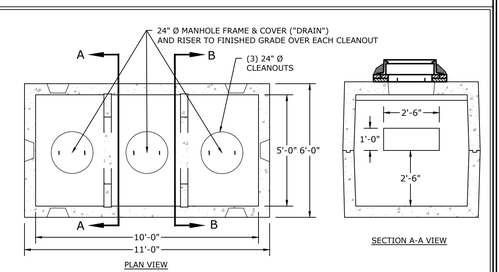

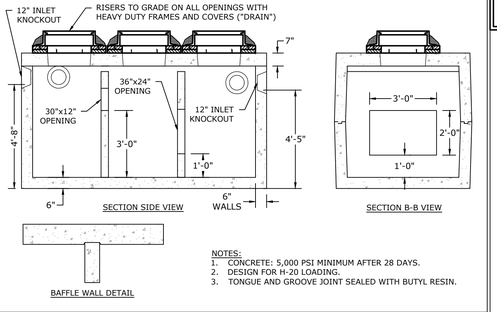

NOTES:
1. CONCRETE: 5,000 PSI MINIMUM AFTER 28 DAYS.
2. DESIGN FOR H-20 LOADING.
3. TONGUE AND GROOVE JOINT SEALED WITH BUTYL RESIN.

SEDIMENT SEPARATOR - 1500 GALLON TANK (TYP)

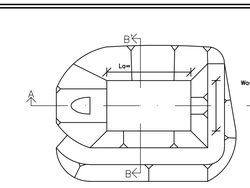

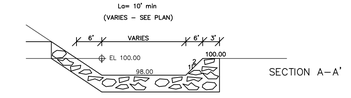

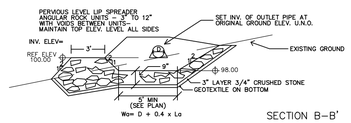

PERVIOUS LEVEL LIP SPREADER WITH HOPPER BOTTOM

32126A
6/21/93
REV# 0

NO.	DATE	REVISION/ISSUE	BY
	9/28/2021	ISSUE FOR SPECIAL PERMIT	AZM

SHEET TITLE: *DETAILS PLAN*
PROJECT NO.: E2925
SCALE: AS NOTED
DATE: 9-6-21
DESIGNED BY: SAM
DRAWN BY: AZM
CHECKED BY:

PROJECT TITLE: *ANTIMONY LLC*
PITTSFIELD ROAD
LENOX, MA

SHEET NO.: C-8 OF SHEETS

FORESIGHT LAND SERVICES — ENGINEERING SURVEYING PLANNING

FORESIGHT LAND SERVICES, INC.
1496 WEST HOUSATONIC STREET - PITTSFIELD, MA 01201
TEL: (413) 499-1560 FAX: (413) 499-3307 WWW.FORESIGHTLAND.COM

CAD/FILE NO.: E2940003.dwg